THIS DOCUMENT IS FOR REFERENCE ONLY. USERS MUST ASSURE THEY ARE USING THE CORRECT REVISION.

REVISIONS				
REV SYM	ECO NUMBER	DESCRIPTION	BY DATE	APP'D DATE
3		UPDATE GAGING & NOTES	K. KOONS 8.26.11	

UNCONTROLLED DOCUMENT
WILL NOT BE UPDATED

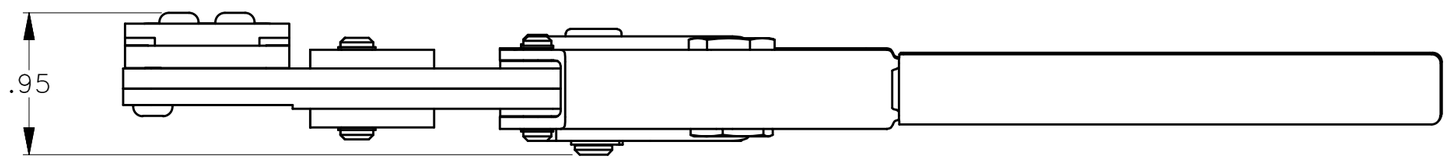

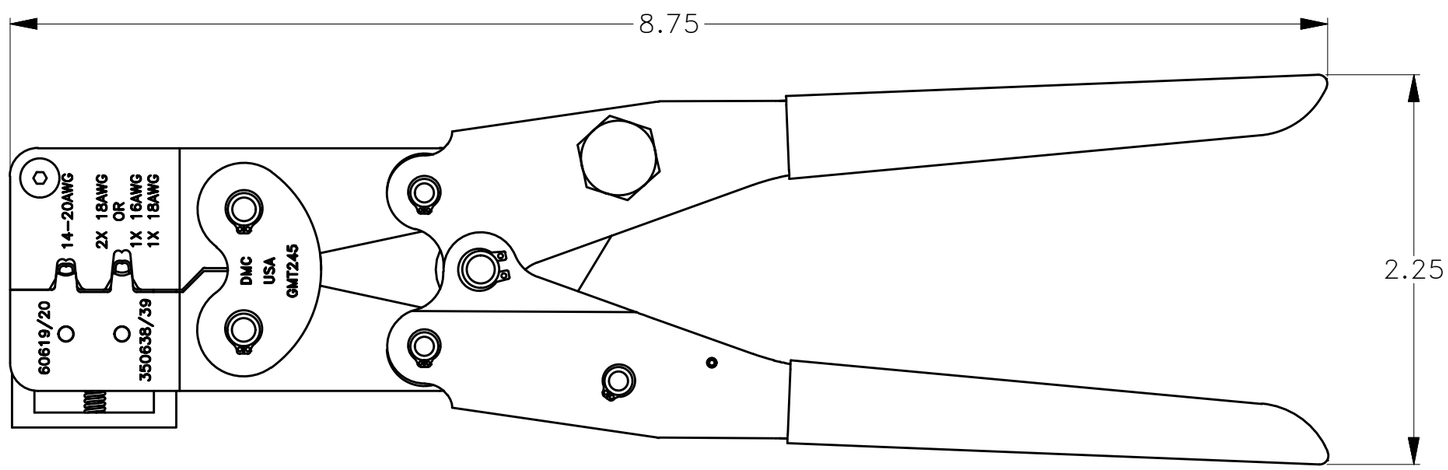

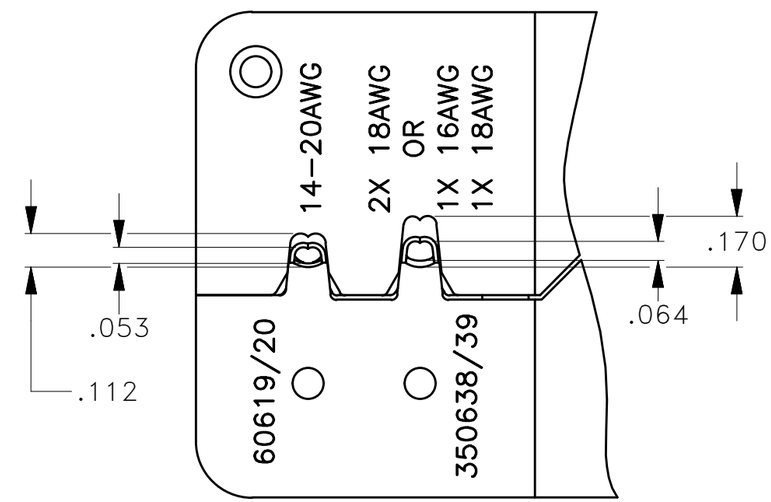

3. TOOL CONFORMS TO TE CONNECTIVITY CRIMP SPEC 114–1012.

2. REF. TE CONNECTIVITY 91504–1 & 90575–1.

1. FOR GAGING, MEASURE WITH A BLADE MICROMETER. SAMPLE CRIMP ON Ø.062 50/50 SOLID SOLDER FOR INSULATION JAWS. SAMPLE CRIMP ON Ø.187 50/50 SOLID SOLDER FOR CONDUCTOR JAWS.

NOTES:

RESTRICTED & CONFIDENTIAL

CONFIDENTIAL PROPERTY OF DANIELS MANUFACTURING CORP. NOT TO BE DISCLOSED TO OTHERS, REPRODUCED OR USED FOR ANY OTHER PURPOSE EXCEPT AS AUTHORIZED IN WRITING BY DANIELS MANUFACTURING. MUST BE RETURNED TO DANIELS MANUFACTURING CORP. ON COMPLETION OF ORDER OR OTHER PURPOSE FOR WHICH LENT.

CREATED FROM AN INVENTOR MODEL. CHANGES MUST BE REFLECTED IN THE 3D PART

DO NOT SCALE DRAWING

MATERIAL

HEAT TREAT

FINISH

ITEM	PART NO.	QTY.	DESCRIPTION/REMARKS

DRN. Kirk C Koons DATE 8.26.11
CHK'D. RRR DATE 8.26.11
APP'D. DATE
APP'D. DATE

NOTE:
THIS DRAWING IS AN OUTLINE DRAWING OF THE RESPECTIVE DMC PART NUMBER INDICATED. ACTUAL DMC PART NUMBER IS DRAWING NUMBER WITHOUT THE "–ENV" SUFFIX

DANIELS MANUFACTURING CORP.
ORLANDO, FLORIDA
CAGE 11851

TITLE
CRIMP TOOL ENVELOPE DRAWING

WHERE USED:

SIZE	SCALE	CAD P/N	SHEET	OF
B	NTS	GMT245–ENV	1	1

POSTING

DWG. NO. GMT245–ENV REV. 3